Electronic Projects

ECE 3001 Lecture Notes

Fall 2019

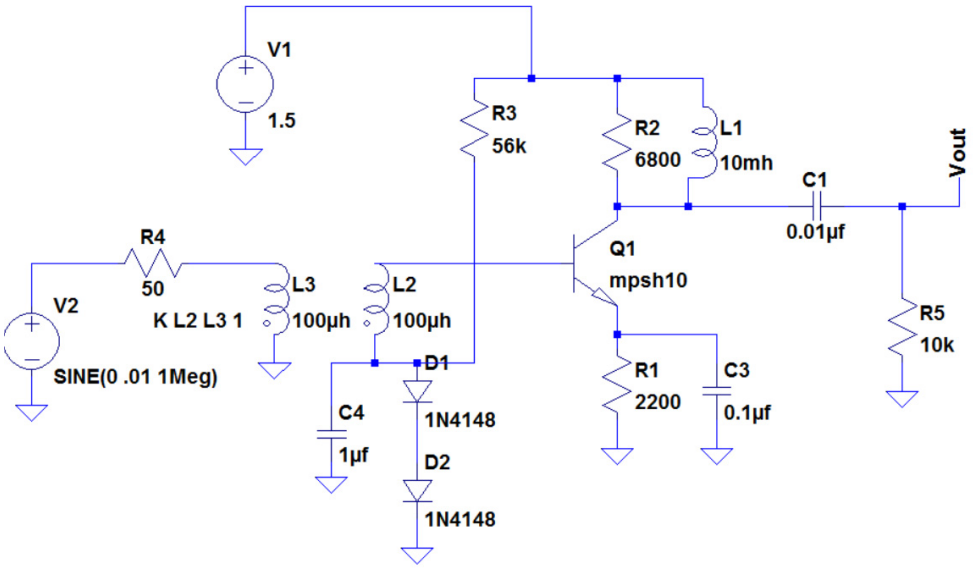

.include mpsh10.txt .tran 10u

Chapter 1

Introduction

In this chapter first chapter of lecture material we overview the course from a high level. The following topics will be addressed:

- Course theme
- Why choose electronic projects as a *general education* course?
- The course syllabus
- Instructor policies
- Introduction to the tools
- Introduction to electronic circuits
- Discussion and Quiz 1

Course Theme: How We Communicate

- A course designed for non-engineering majors
- The principles of radio engineering are introduced through hands-on building and testing of radio circuits
- Compass curriculum emphasis features:
  - History,
  - Personalities,
  - Social and cultural impacts,
  - Economic and business impacts, and
  - Sustainability issues
- Approved for the Compass Curriculum requirement:
  - A *navigate* course
  - Advanced Core
  - Prerequisite a Freshman level science course

Why Choose This Course?

- Curiosity
  - Electronics is pervasive in todays society, and communications technology in particular is a big player
  - You are already a *maker*[1] and want to go further

Maker culture

From Wikipedia, the free encyclopedia

The **maker culture** is a contemporary culture or subculture representing a technology-based extension of DIY culture[*citation needed*]. Typical interests enjoyed by the maker culture include engineering-oriented pursuits such as electronics, robotics, 3-D printing, and the use of CNC tools, as well as more traditional activities such as metalworking, woodworking, and traditional arts and crafts. The subculture stresses a cut-and-paste approach to standardized hobbyist technologies, and encourages cookbook re-use of designs published on websites and maker-oriented publications.[1] There is a strong focus on using and learning practical skills and applying them to reference designs[*citation needed*].

- You have a desire to explore technology details at the ground floor with lots of *hands on*
  - You enjoy DIY
  - You enjoy *tinkering*
  - You have a specific project in mind and hope to get to the next level
  - You are fascinated by technology and need a push to dig deeper

1. https://en.wikipedia.org/wiki/Maker_culture

The Course Syllabus

ECE 3001/Navi 3001/ECE3201
Electronic Projects

Fall Semester 2019: ENGR 230, 12:15–1:30 PM

Compass Curriculum Perspective

This course is a *Navigate* course in the *Compass Curriculum*. Navigate courses provide UCCS students with a common educational experience at the upper division level that broadly expands their perspective beyond their major discipline. An objective is to engage students actively in applying and integrating knowledge, which is drawn from a range of disciplines and includes advanced-level critical thinking.

An objective of Navigate courses is to promote curricular and intellectual connections between students' coursework for the Compass Curriculum and the work they do for their academic majors, while providing students an opportunity to integrate their learning, ideally beyond their disciplinary area of study.

Navigate courses help you learn about:

- How academic knowledge and skills can be applied to solve practical problems outside of your disciplinary area of study. This is the "knowledge in action" component of the course.
- Intellectual and curricular intersections between your major coursework and other areas as a way to integrate and apply learning
- Explore what it takes to work with different types of people with different perspectives

Essential Learning Outcomes:

Apply and integrate knowledge from a range of disciplines, including interdisciplinary or cross-disciplinary research

- Gather, critically analyze and evaluate quantitative information within relevant disciplinary contexts
- Gather, critically analyze and evaluate qualitative information within relevant disciplinary contexts
- Demonstrate the core ethical principles and responsible methods of your discipline

Course Description

Designed for non-engineering majors. In the Fall semester, the principles of *How We Communicate* are introduced through hands-on building and testing of radio circuits. In the Spring semester, the principles of *How We Control* are introduced through hands-on building, programming, and testing of micro-controllers. The history, personalities, social and cultural impacts, economic and business impacts, and sustainability issues are integrated into the lecture material for the target technology. Approved for Compass Curriculum requirement: Advanced Core. Prer., Freshman level science course.

Semester Emphasis Details

This offering of Electronic Projects will emphasize analog circuit design for communication receivers. Practical experience in breadboarding radio circuits will be obtained starting from little or no experience in circuit theory. To take this course it is assumed that you have a strong desire to build and tinker with electronics. Today this is what is known as being a *Maker*. Throughout the course you will also gain experience with soldering. To start with, however, we will work with solder-less breadboards.

Detailed Syllabus for Fall 2019

Instructors: Dr. Mark Wickert **Office:** EN292 **Phone:** 255-3500
mwickert@uccs.edu **Fax:** 255-3589
http://www.eas.uccs.edu/wickert/ece3001/

Office Hrs: Mon/Wed 1:30–2:15 PM + other times by appointment

Suggested Text: R. Quan, *Build Your Own Transistor Radios*, McGraw Hill, New York, 2013 (ISBN 978-0-07-179970-6).

Optional: P. Scherez and S. Monk, Practical Electronics for Inventors, 4th edition. (ISBN ISBN 978-1259587542).

Required Hardware: Analog Discovery2 USB oscilloscope, logic/spectrum/network analyzer ($179 www.digilentinc.com) plus the software Waveforms 3, available for free download. A parts kit, details TBD. Recommend LTSpice for computer aided circuit analysis (free download at http://www.linear.com/designtools/software/)

Grading:
1.) Lab assignments involving circuit test and measurement 20%.
2.) Writing exercises 15%.
3.) Exams (mid and final) at 15% each, 30% total.
4.) Final lab on receiver electronics leading to superheterodyne kit build 15%.
5.) Superheterodyne radio kit PCB fully tested 20%.

Topics	Lect + Lab
1. Introduction and Course Overview	1
2. Electronic circuit analysis and design using resistors	4
3. Electronic circuit analysis and design using resistors, capacitors, and inductors (passives)	4
4. Electronic circuit analysis and design with active elements	6
5. Radio electronics	6
6. Radio kit PCB assembly and test	4

Required Parts Kit Purchased from the ECE department for $83.00 (see the last two pages of this document for details). This kit includes the radio kit you will assemble towards the end of the semester. The *Analog Discovery* is $179 additional expense

Writing Exercises **Paper 1**: How does radio/wireless technology affect your personal life. (Current view)
1.) How do you use it ? Do you talk to fewer people face-to-face?
2.) What would happen if you could not use it?
3.) How do you see it changing/evolving in 10 years?
4.) How is using it changing your communication skills
Paper 2: How does radio/wireless technology affect your professional (college major) life. (Historical view)
1.) How is the technology used today?
2.) What was used before radio/wireless technology was invented?

Learning Outcomes

The expected learning outcomes of this course are: Soldering for circuit breading boarding; Ohm's law and basic DC resistor circuits, both simulation and lab measurement/test; Resistor, inductor, and capacitors circuits, both simulation and lab test using pulse signals and sinusoids; Basic radio circuits and inductor/capacitor tank circuit resonant frequency, both simulation and lab test; Radio frequency oscillators and mixers for AM radio, both simulation and lab test; PCB assembly and test of an AM radio kit.

Parts Kit Details

ECE 3001/ECE 3201 Fall 2018 Parts List — **Parts for Fall 2019 ~same**

In this parts list the required parts are cumulative over a series of 4+ labs and the final radio kit build.

Lab 1	Qty	Component	Value	Description/Notes	Cost	Kit Total
Soldering Practice						
	1	Breadboard		Available from Electronic Express 03MB102PLTWWK	$8.95	$8.95
	1	Wirestripper		Available from Electronic Express 060220/602HT1042	$5.50	$5.50
	1	Needle noise pliers		elexp 060210	$1.95	$1.95
	12	Axial lead resistor	2.2k 10%	elexp 130052.2K	$0.06	$0.72
	1	3.5mm jack		Mouser Part #: 806-STX-M6-K	$0.28	$0.28
	1	Parts box		A small plastic box for keeping components in . Elexp 0611T155	$2.85	$2.85

3.5 mm Audio jack

Lab 2	Qty	Component	Value	Description/Notes		
Circuits with Resistors						
	1	Axial lead *precision* resistor	1k 1%	A precision resistor used for making current measurements is the absence of a current meter on the Analog Discovery. Mouser #: 603-MFR-25FRF521K	$0.10	$0.10
	1	Axial lead resistor	10k 10%	A 5% tolerance is OK too. Will be plugged into breadboard. Elexp 1300510K	$0.06	$0.06
	1	Axial lead resistor	15k 10%	A 5% tolerance is OK too. Will be plugged into breadboard.Express Part #:1300515K	$0.06	$0.06
	1	Axial lead resistor	20k 10%	A 5% tolerance is OK too. Will be plugged into breadboard.Express Part #:1300520K	$0.06	$0.06
	1	Axial lead resistor	47k 10%	A 5% tolerance is OK too. Will be plugged into breadboard.Express Part #:1300547K	$0.06	$0.06
	1	Single-turn PCB mount potentiometer	10k	A small single-tiurn POT that can be plugged into a breadboard .xpress Part #:18ST510K	$0.90	$0.90
	1	Extra-long break away 0.1" 16-pin strip male header		Male to male pin header for interfacing breadboard pins to female flyleads on the Analog Discovery. Note the Analog Discovey 2 includes a few of these pins, more will be helpful. Adafruit PRODUCT ID: 400 (5 for $3.00) mouser 485-400	$0.60	$0.60

Single-turn potentiometer

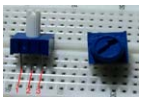

Long Male Header pins

Lab 3	Qty	Component	Value	Description/Notes		
Circuits with R, L, & C						
	2	Axial lead resistor	910 10%	A 5% tolerance is OK too. Will be plugged into breadboard.Express Part #:13005910	$0.06	$0.12
	1	Axial lead resistor	470 10%	A 5% tolerance is OK too. Will be plugged into breadboard. Express Part #:13005470	$0.60	$0.60
	2	Axial lead resistor	100k 10%	A 5% tolerance is OK too. Will be plugged into breadboard. Express Part #:13005100K	$0.60	$1.20
	1	Axial lead inductor (choke)	1mH 10%	A 20% tolerance is OK too. Try to find a small size, yet not have a large series resistance. Mouser #: 963-CAL45TB102K	$0.99	$0.99
	1	IF transformer	42IF100	A small variable inductor in a metal can. Available from Mouser. Used for creating a tuning circuit along with a variable capacitor. --> Mouser #: 42IF100-RC	$1.07	$1.07
	1	Radial lead capacitor	100nF 10%	A 20% tolerance is OK too. Mouser Part #: 594-K104M15X7RF53L2	$0.10	$0.10
	1	Variable capacitor	Dual 335pF and 20 pF fixed	Available from Mike's Electronic Parts. --> SKU: VarCap266	$4.99	$4.99
	1	Knob for variable cap		Larger knob (also buy 3/16 screws?). Available from Mike's Electronic Parts.SKU: LrgExtKnob	$1.97	$1.97
				https://www.mikeselectronicparts.com/		

1 mH Axial Inductor

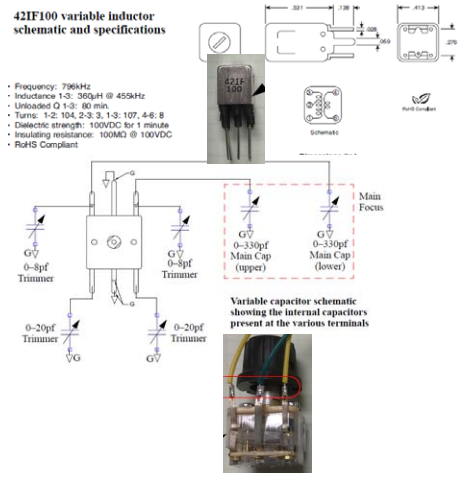

Lab 4	Qty	Component	Value	Description/Notes		
Acive Device Circuits						
	1	Axial lead resistor	1.1k 10%	A 5% tolerance is OK too. Will be plugged into breadboard.Express Part #:130051.1K	$0.60	$0.60
	1	Axial lead resistor	2.4k 10%	A 5% tolerance is OK too. Will be plugged into breadboard. Express Part #:130052.4K	$0.60	$0.60
	1	Axial lead resistor	3.3k 10%	A 5% tolerance is OK too. Will be plugged into breadboard.Express Part #:130053.3K	$0.60	$0.60
	1	Axial lead resistor	4.7k 10%	A 5% tolerance is OK too. Will be plugged into breadboard.Express Part #:130054.7K	$0.60	$0.60
	1	Axial lead resistor	10k 10%	A 5% tolerance is OK too. Will be plugged into breadboard.1300510K	$0.60	$0.60
	1	Axial lead resistor	22k 10%	A 5% tolerance is OK too. Will be plugged into breadboard.1300522K	$0.60	$0.60
	1	Axial lead resistor	30k 10%	A 5% tolerance is OK too. Will be plugged into breadboard.1300530K	$0.60	$0.60
	1	Axial lead resistor	47k 10%	A 5% tolerance is OK too. Will be plugged into breadboard.1300547K	$0.60	$0.60
	1	IF transformer	42IF101	455 kHz IF transformer/filter. A small variable inductor with a shunt capacitor in a metal can. Available from Mouser. --> Mouser #: 42IF101-RC	$1.07	$1.07
	1	Radial lead capacitor	100pF 10%	A 20% tolerance is OK too. Mouser Part #: 75-WKO101MCPQC0KR	$0.28	$0.28

42IF101

	4	Radial lead capacitor	10nF 10%	A 20% tolerance is OK too. TDK FG28C0G1H103JNT06 Enlarge 581-SR151E103MAR	$0.10	$0.40
	3	Radial lead capacitor	100nF 10%	A 20% tolerance is OK too. Mouser Part #: 594-K104K15X7RF53L2	$0.10	$0.30
	1	Radial lead capacitor	1uF 10%	A 20% tolerance is OK too. Mouser Part #: 140-REA1R0M2CBK0511P	$0.10	$0.10
	1	Radial lead capacitor	33uF 10%	A 20% tolerance is OK too. Mouser Part #: 140-REA330M1VBK0611P	$0.08	$0.08
	1	Radial lead capacitor	100nF 10%	A 20% tolerance is OK too.Mouser Part #: 140-REA101M1CBK0611P	$0.09	$0.09
	1	Axial lead diode	IN34A	A small signal Germanium diode for use as an envelope detector in a radio receiver application. In a glass axial package. Available from Mike's Electronic Parts	$0.53	$0.53
	2	Axial lead diode	IN4148	A small signal Silicon diode for use in device biasing. In a glass axial package. Mouser Part #: 512-1N4148TR	$0.10	$0.20
	1	TO92 package	2N3904	A small signal NPN transistor in a plastic package. Mouser Part #: 512-2N3904BU	$0.17	$0.17
	1	T092 package	MK484	The MK484 AM radio IC is a fully functional AM radio detector on a chip. Available from Mike's Electronic Parts Price drops with quantity.	$3.47	$3.47
Lab 4+	**Qty**	**Component**	**Value**	**Description/Notes**		
Head-phone Amplifier						
	1	Axial lead resistor	10 10%	A 5% tolerance is OK too. Will be plugged into breadboard.Express Part #:130051	$0.06	$0.06
	1	Axial lead resistor	47 10%	A 5% tolerance is OK too. Will be plugged into breadboard.Express Part #:1300547	$0.06	$0.06
	1	Radial lead capacitor	0.1uF 20%	A 10% tolerance is OK too.594-K104K15X7RF53L2	$0.28	$0.28
	1	Radial lead capacitor	50nF 20%	A 10% tolerance is OK too. Mouser Part #: Mouser Part #:	$0.10	$0.10
	2	Radial lead capacitor	10uF 20%	Electrolytic. A tighter tolerance is OK too.Mouser Part #: 140-REA100M1HBK0511P	$0.08	$0.16
	1	Radial lead capacitor	470uF 20%	Electrolytic. A tighter tolerance is OK too.140-REA471M1EBK1012P	$0.19	$0.19
	1	Radial lead capacitor				$0.00
	1	8-pin DIP IC pkg	LM386	Audio amplifier IC.Mouser Part #: 926-LM386N-1/NOPB	$0.97	$0.97
Lab 5	**Qty**	**Component**	**Value**	**Description/Notes**		
Final Project						
	1	Elenco AM/FM Radio Kit		Capstone project. A complete AM/FM radio kit. Best price appears to be Amazon. https://www.amazon.com/Elenco-Radio-Kit-Combines-Transistors/dp/B008515U1U/ref=sr_1_1?s=toys-and-games&ie=UTF8&qid=1472307989&sr=1-1&keywords=elenco+am+fm+radio+kit	$29.99	$29.99
Total parts	69				$74.43	$76.43
Shipping and handling						4.83
				Total Kit cost		$81.26

1N4148

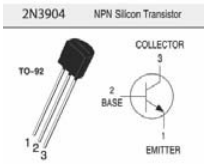

MK484

LM386

Fall 2019 Cost $83

Important Deadlines: Review the Fall 2019 deadlines: https://www.uccs.edu/registrar/course-deadlines/fall-2019. Performance histograms (HW, Quiz, & Exams) will be discussed in class prior to the last day to drop, Friday November 1. Use this to decide on continuing or dropping the course – the deadline for dropping without ECE Chair signature (**NOT the Dean as stated in the link above**) is November 1. Only under **extenuating circumstances** will a late drop be considered.

fall-2018. Performance histograms (HW, Quiz, & Exams) will be discussed in class prior to the last day to drop, Friday October 26. Use this to decide on continuing or dropping the course – the deadline for dropping without ECE Chair signature (**NOT the Dean as stated in the link above**) is October 26. Only under **extenuating circumstances** will a late drop be considered.

Instructor Policies

- As this is a very hands-on course, *lab demos* will be integrated along with the need to write lab reports
- Homework/Lab reports are due at the start of class
- If business travel or similar activities prevent you from attending class and turning in your home work, please inform me beforehand
- Grading is done on a straight 90, 80, 70, ... scale with curving below these thresholds if needed
- *Screencasts* of the lectures will be made available as soon as possible after each lecture; this may be of help to those of you that travel and to others for review purposes
- Homework/lab solutions, as is possible, will be posted on the course Web site as PDF documents with password protection
- Old exams and/or practice exams, as is possible, will be posted on the Web site prior to the midterm and final exams

Introduction to the Tools

- **Analog Discovery** portable laboratory test instrumentation (hardware) and the Waveforms software

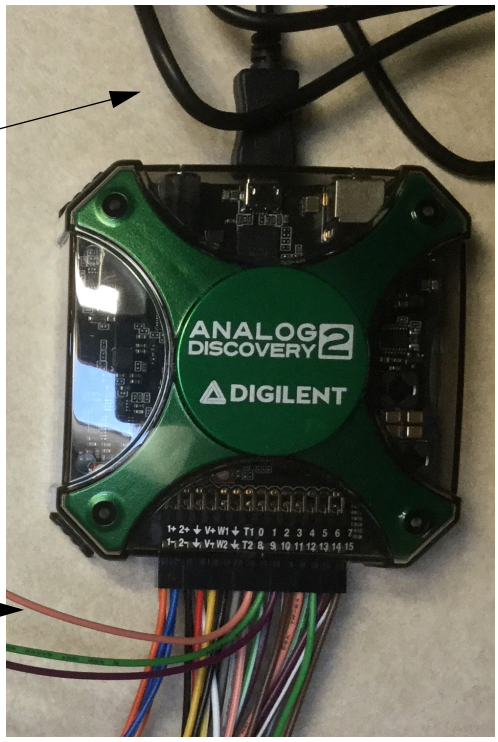

USB to connect to PC

Fly leads to connect to circuit/system under test

WaveformsTM software V2 shown; V3 supports Mac & Linux

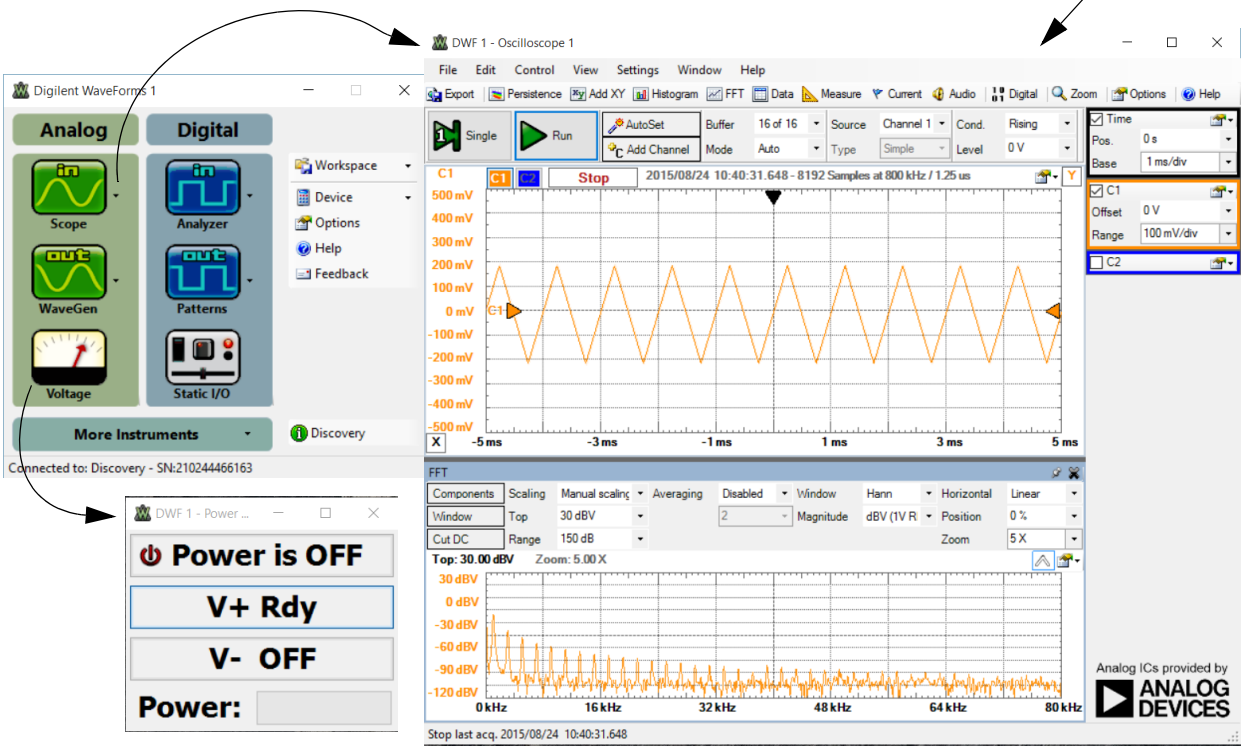

- **LTspice** (VI) circuit analysis and modeling software

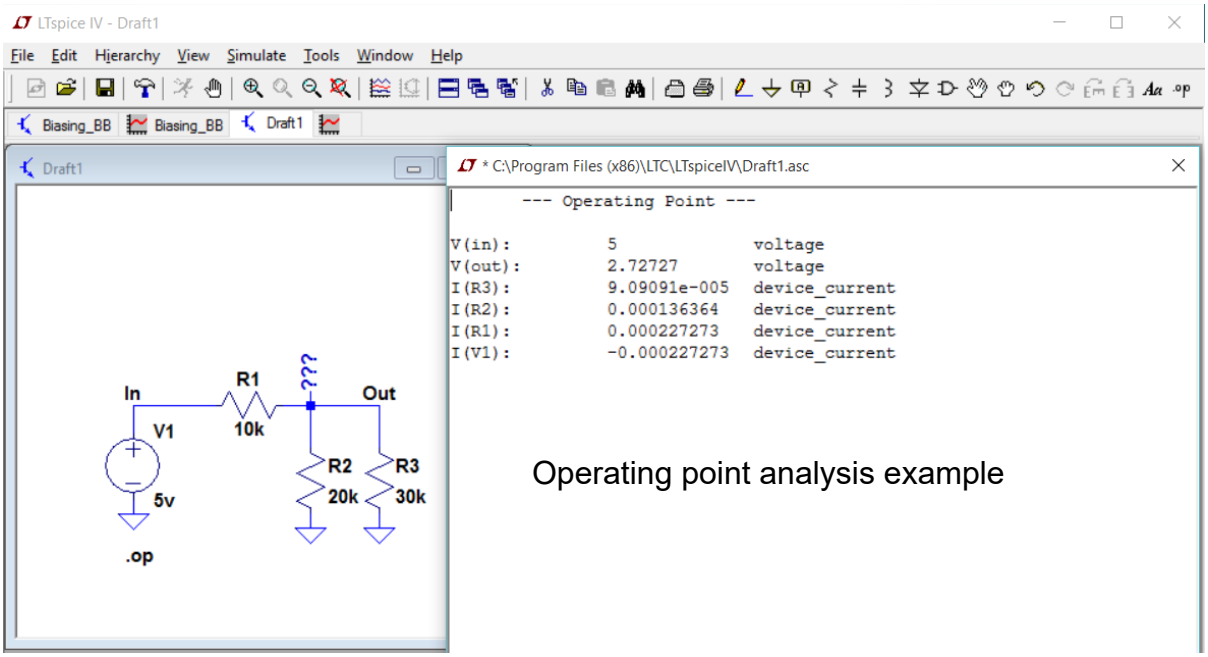

  – Draft schematic, set simulation commands, Run and plot

- MS Excel or similar for simple calculations
- You may decide to invest in a small volt/ohm meter:

RADIOSHACK® 17-RANGE ANALOG MULTIMETER
$24.99

RADIOSHACK TRUE-RMS 46-RANGE DIGITAL MULTIMETER
$34.97

RADIOSHACK® 19-RANGE ANALOG MULTIMETER
$29.99

- Other tools, hardware and software, may creep in as deemed appropriate for the task at hand

Introduction to Electronic Circuits

- Consider a simple one transistor (common emitter) amplifier constructed on a *solderless breadboard* (original AD shown)

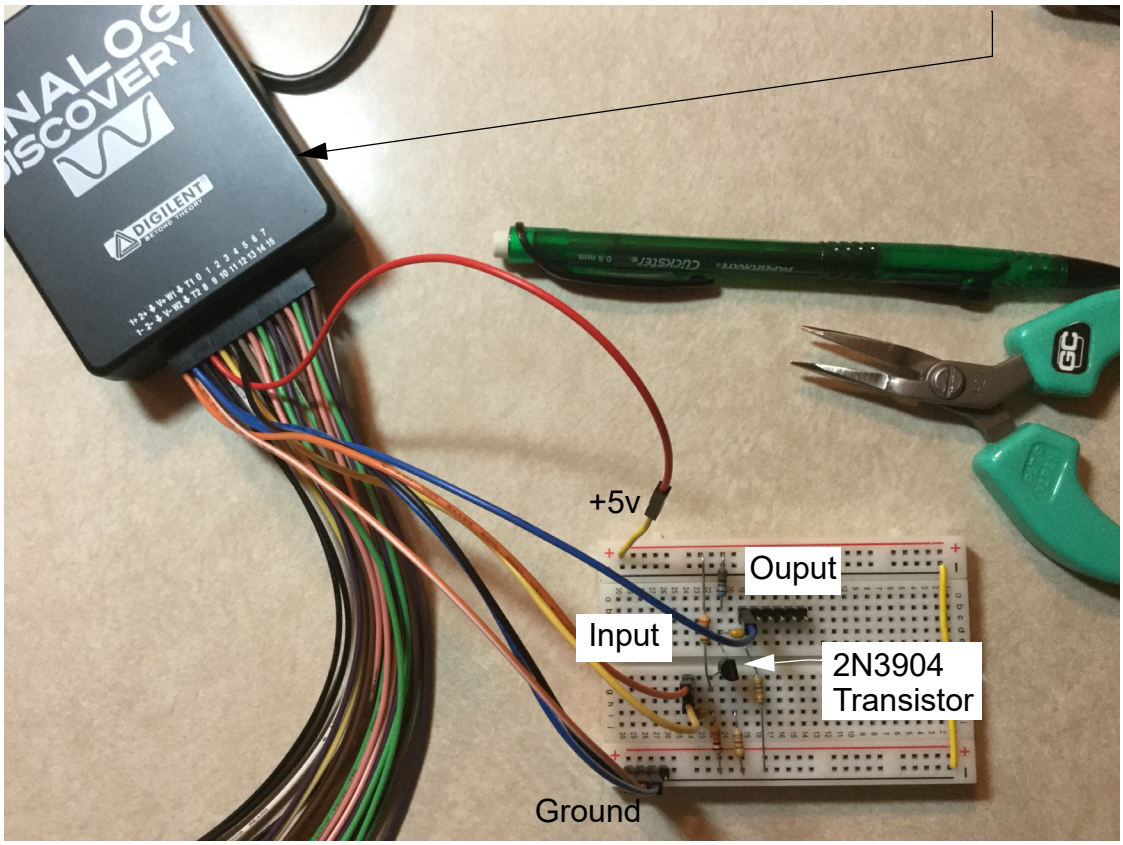

- The circuit schematic drawn in LTspice is shown below:

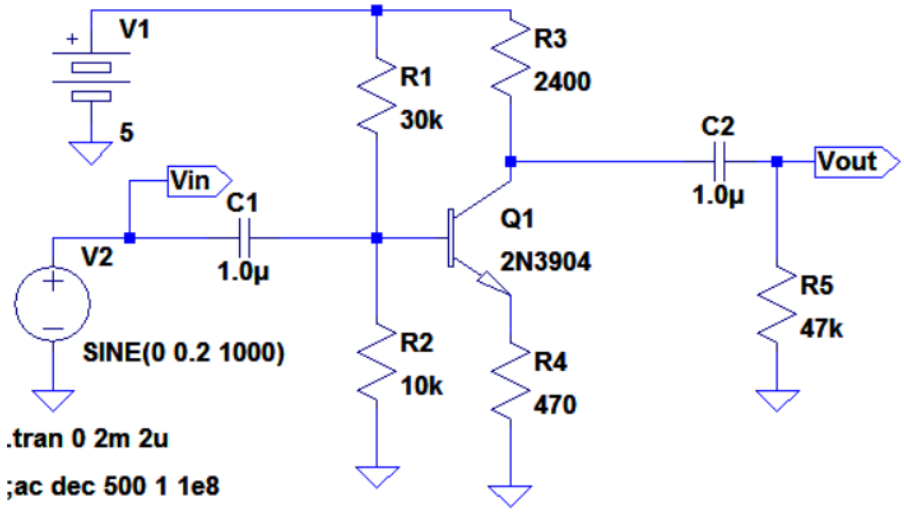

- So what is an amplifier?

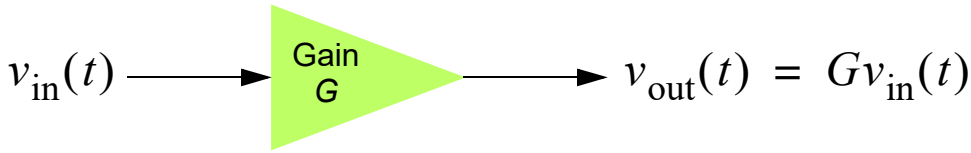

  – An amplifier takes an input signal having a small amplitude and outputs a larger amplitude signal
  – *Amplitude* refers to the strength of the signal or thinking of a music player, the loudness of the signal
- In the circuit diagram or *schematic*, the connection point for the input signal is labeled V_{in} and the output is labeled V_{out}
- As a test signal we apply a time varying sinusoid which we describe mathematically as

$$v_{in}(t) = A_i \cos[2\pi(1000)t] = 0.2\cos[2\pi(1000)t] \qquad (1.1)$$

- Consider the LTspice simulated input/output waveforms:

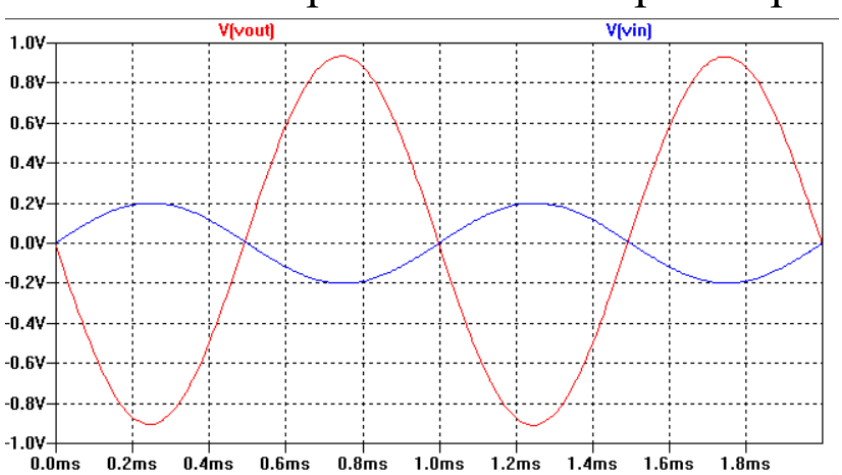

The amplifier gain is approximately 0.92/0.2 = 4.6

- We that the output waveform (signal) is indeed larger in amplitude than the input

$$\begin{aligned} v_{out}(t) &= A_o \cos[2\pi(1000)t + \phi] \\ &\approx 0.92\cos[2\pi(1000)t + \pi] \end{aligned} \qquad (1.2)$$

  - Don't be intimidated by a little math; this is included to let you know that we can, when needed, use math modeling
- Bench testing and getting things to work is what this class is all about (writing down equations is not the focus here)
- Using the Analog Discovery we can apply a sinusoidal test waveform just like in the computer simulation
- We configure one of two waveform generators to produce a 200 mv peak amplitude sinusoid at 1 kHz

Choose a sine wave output

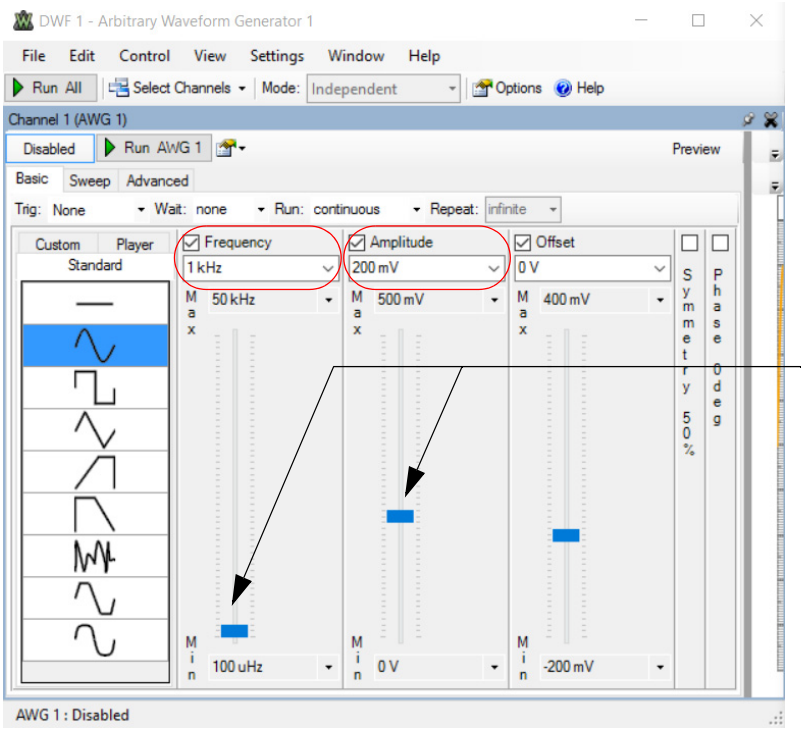

Set the frequency and the amplitude

- We then connect the two channel scope to the input and output test point of the circuit and observe the waveform:

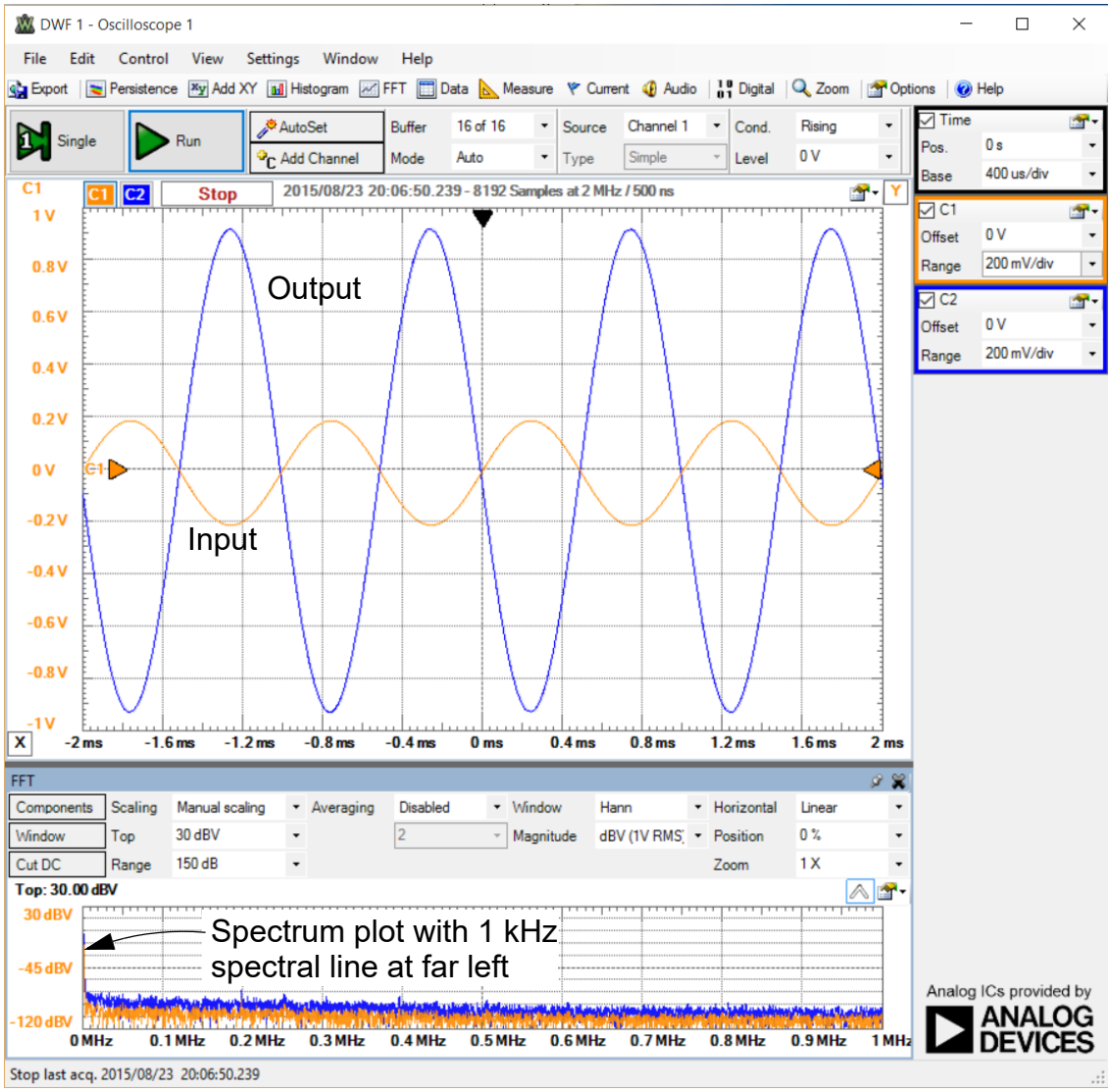

- The measured results look amazingly very much like what the circuit simulator predicted!
- What do you think?

A Peek at What Lies Ahead

- Two significant milestone are:
  - Build a tuned radio frequency (TRF) AM radio

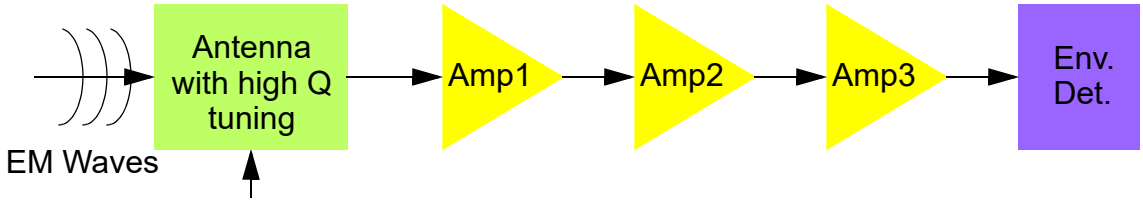

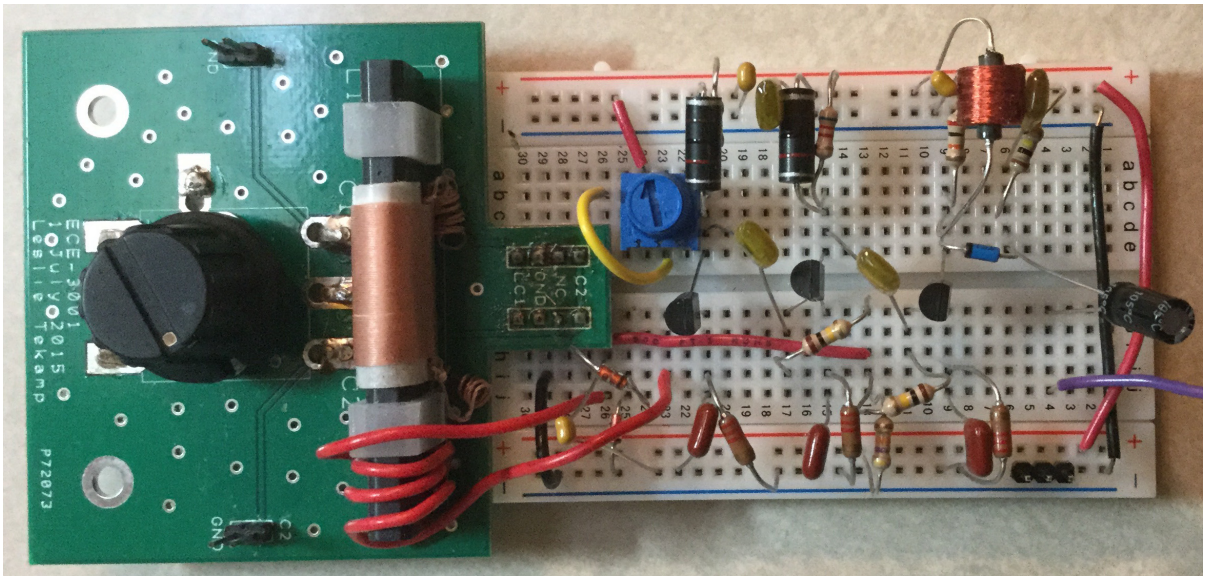

  - Build a superheterodyne AM (FM) radio

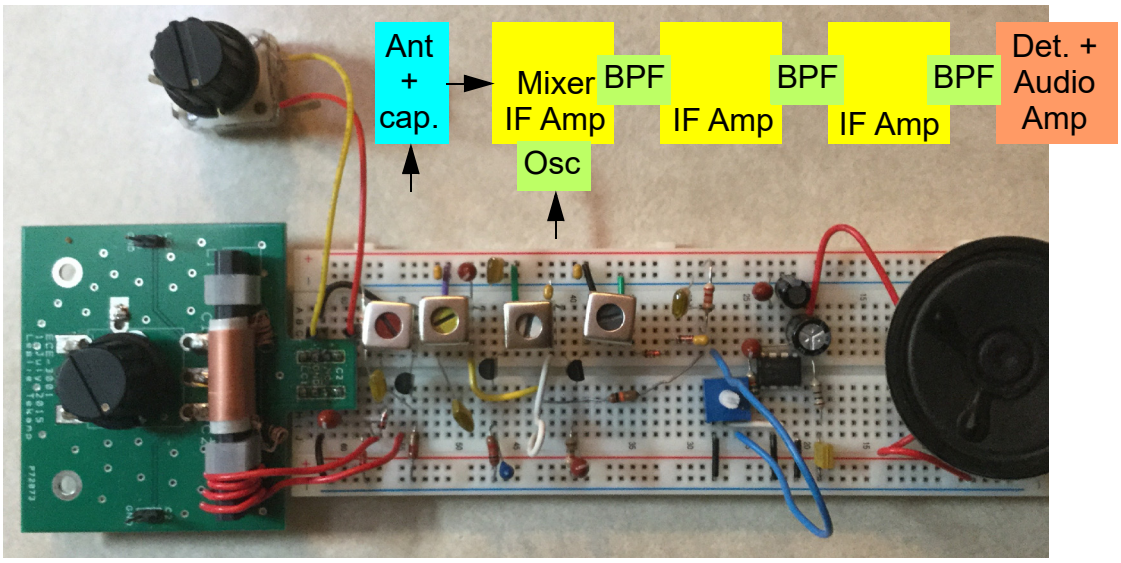

Quiz 1

- Finding out more about you!