Lab 4: Active Device Circuits

Due Monday December 9, 2019

Problems:

1. **Basic Envelope Detector**: Consider the test set-up of notes Example 3.4. As a

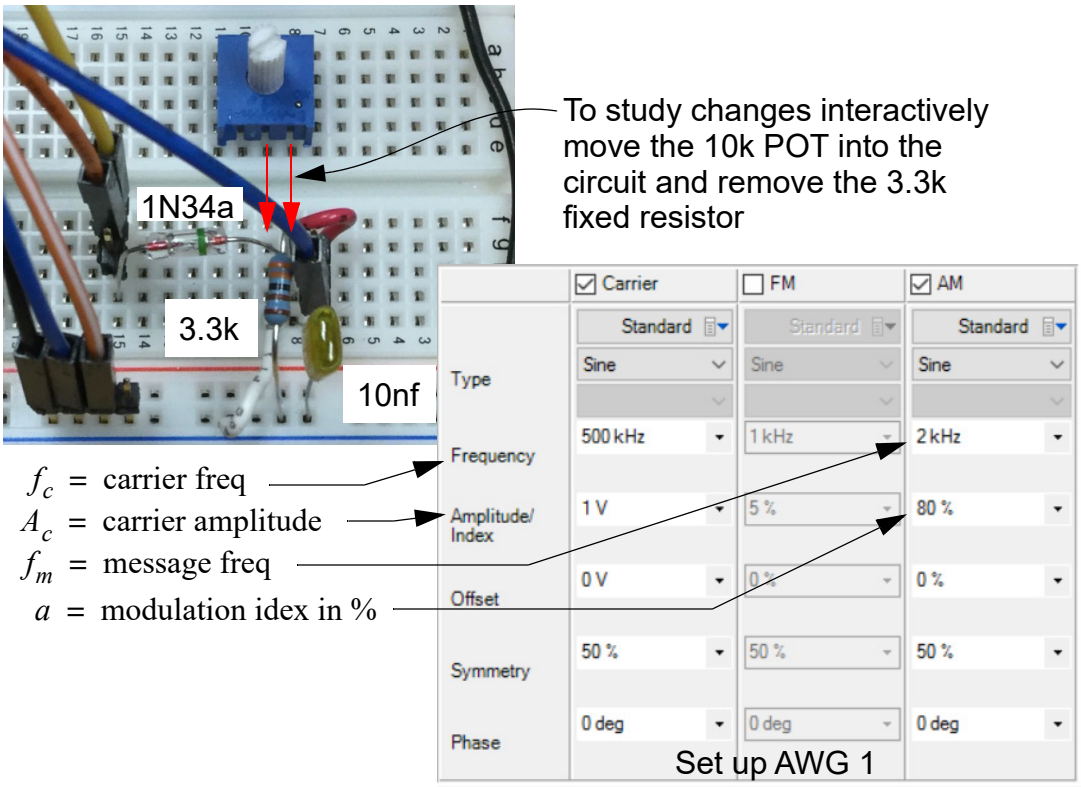

deviation from the notes example, set the carrier frequency to 500 kHz for all of the measurements. Keep the message frequency set to 2 kHz initially.

(a) Remove the 10nF capacitor and capture a scope plot of the AM signal before and after the 1N34a diode.

(b) Reconnect the 10nF capacitor and record the scope time domain output.

(c) Look at the envelope detector output in the frequency using the spectrum analyzer that is part of the scope. Observe the spectrum near 2 kHz, the message signal, and near 500 kHz, the original location of the AM signal. Verify that the lowpass filtering action of the envelope detector with both R and C present, passes mostly the 2 kHz signal while suppressing the 500 kHz carrier and its sidebands.

(d) Replace the 3.3k fixed with resistor with your 10k pot and record a couple of scope time domain screen shots showing the waveform differences between extreme values of R.

2. **Small Signal Common Emitter (CE) Amplifier**: Consider the following amplifier circuit discussed in notes Chapter 7. Start with the component values given in the schematic above.

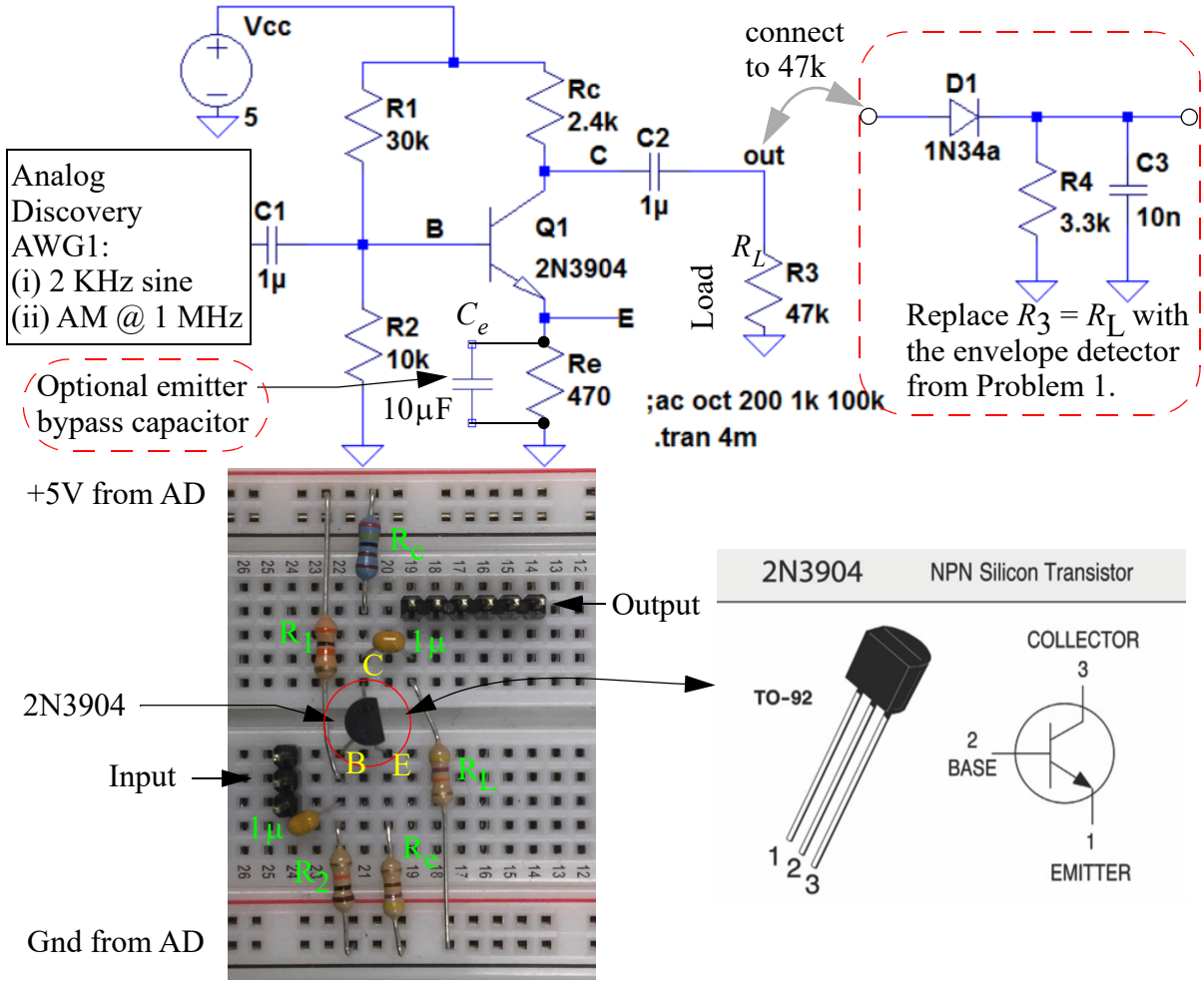

(a) Build up the CE BJT amplifier and prepare to test it with a 10 kHz sinusoid. Do not attach the envelope detector at this point.

(b) Build up a corresponding LTspice model for comparison purposes.

(c) Input a 10mV peak sinusoid at 10 kHz in both the hardware and the LTspice model. Compare your results in terms of bias level at the base, emitter, and collector, and the output signal when probed before the coupling capacitor.

(d) Insert your 10k pot in place of R_2 and verify that you can adjust the bias level at the collector. Attempt to center the output waveform about 2.75V DC.

(e) Place a 10µF bypass capacitor into the circuit and simulation, and repeat just the output waveform measurement. What is the input to output voltage gain G_v ($v_{\text{out,peak}}/v_{\text{in,peak}}$) before and after placing the capacitor? For the gain measurement place your scope probes outside the coupling capacitors to eliminate the DC bias. You may use the network analyzer if you wish. If you do sweep the frequency from about 10 kHz to 2 MHz.

(f) In the hardware only, attach the envelop detector and apply a 500 kHz AM signal as done in Problem 1. You will likely need to reduce the input level significantly to avoid output waveform clipping. The modulation index should to be reduced to say 50%.

3. **Local Oscillator and Mixer**: Wire up the schematic shown below on a breadboard, initially testing the oscillator portion of the circuit using a 2N3904 as the active device. Later the mixer circuit will be tested using a second 2N3904 device. The complete oscillator plus mixer/IF amplifier schematic is shown below:

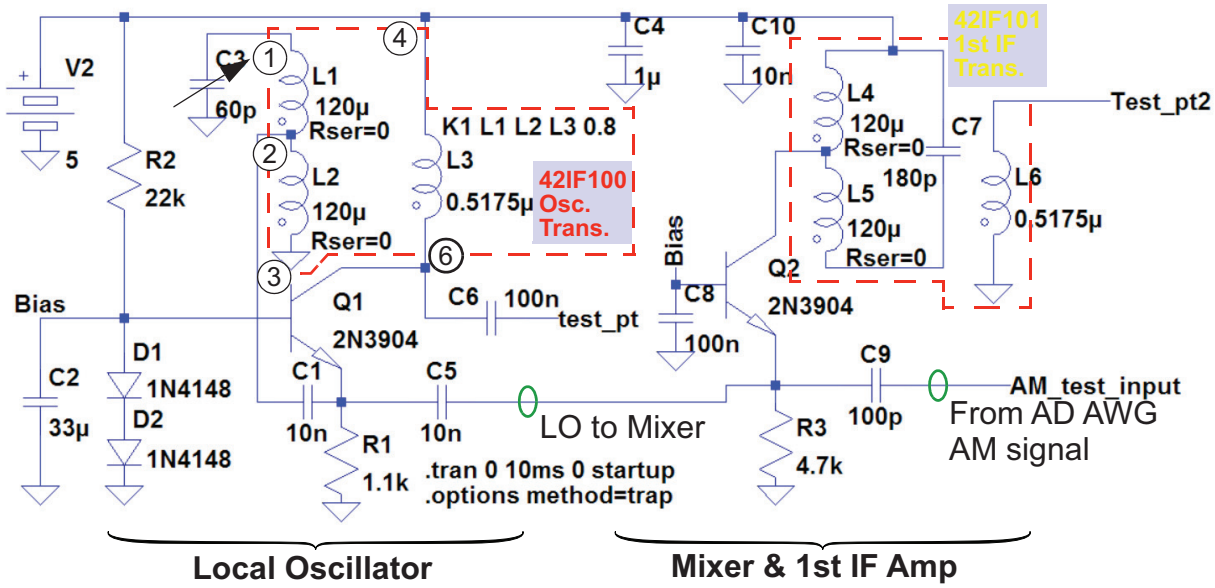

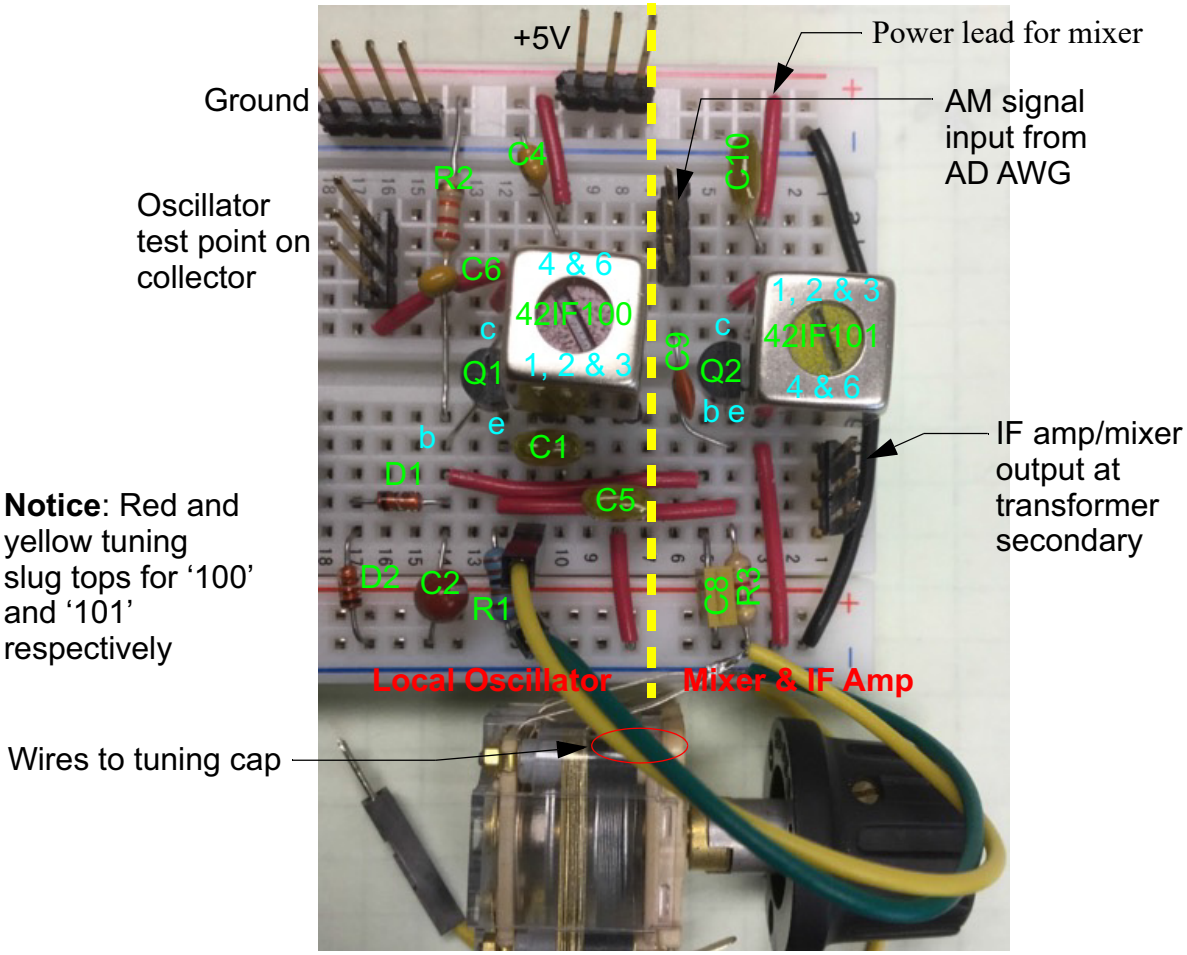

Notice: Red and yellow tuning slug tops for '100' and '101' respectively

(a) Wire up the complete oscillator and mixer IF amp circuit. Initially do not connect power to the mixer circuit so you can focus on making sure the oscillator is working.

(b) Apply power to the oscillator and connect the oscillator test point to the Analog Discovery (AD) scope channel 1. First off use the scope to if the oscillator is actually oscillating. In **Hint**: In my testing I found that I needed to swap 42IF100 pints 4 and 6 from the way I originally wired the circuit. Capture a time domain (waveform) plot of the working oscillator output.

(c) Using the scope spectrum analyzer measure the minimum to maximum tuning range in kHz. I suggest using the *hot tracks* capability of the analyzer to take your measurements. The desire is to set f_{LO} to the *high side* of the desired station, that is $f_{RF} + f_{IF}$. In light of this design approach, what is the range of RF frequencies that can be down converted to $f_{IF} = 455\,\text{kHz}$? I suggest taking a screen capture of the oscillator min and max frequencies.

(d) Apply power to the mixer/IF amplifier and apply a 1 MHz AM signal as was done in Problem 1 to the AM signal input of the mixer. Note this signal flows through a 100pF capacitor that connects to the base of Q2. Set the scope time base to $10\,\mu\text{s}$ and observe on the scope spectrum analyzer the down conversion of the 1 MHz AM test signal to 455 kHz. The setting of the AWG should be as shown below:

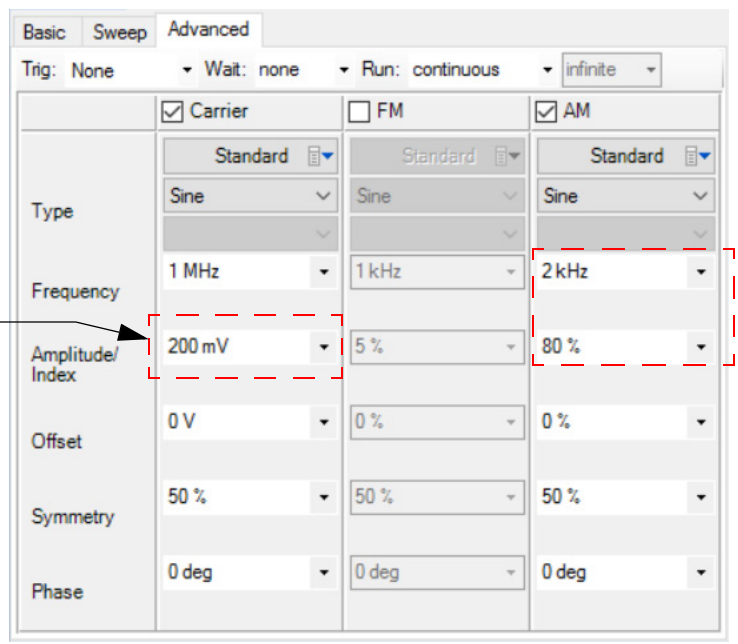

Do not drive too much signal into the mixer!

Keep these settings fixed in parts (d), (e), and (f).

(e) With the scope time base set to $500\,\mu\text{s}$ observe the scope waveform from the IF Amp/ mixer test point (secondary of the 42IF101 transformer). When the local oscillator tunes to 455 kHz above the 1 MHz AM test signal, verify that the a nice clean AM envelope appears on the scope. this parallels the spectral peak seen on the spectrum analyzer from part (d).

(f) Move the AM test signal to a carrier frequency of 1.2 MHz and verify that you can again *tune in* the radio signal you have generated. Your verification should be a repeat of steps (d) and (e) above.